AG DIM.				
	2 POLE	4 POLE	6 POLE	8 POLE
3 HP	12.86	12.86		
5 HP	14.36	14.86		

REVISIONS			
REV	DESCRIPTION	BY	DATE

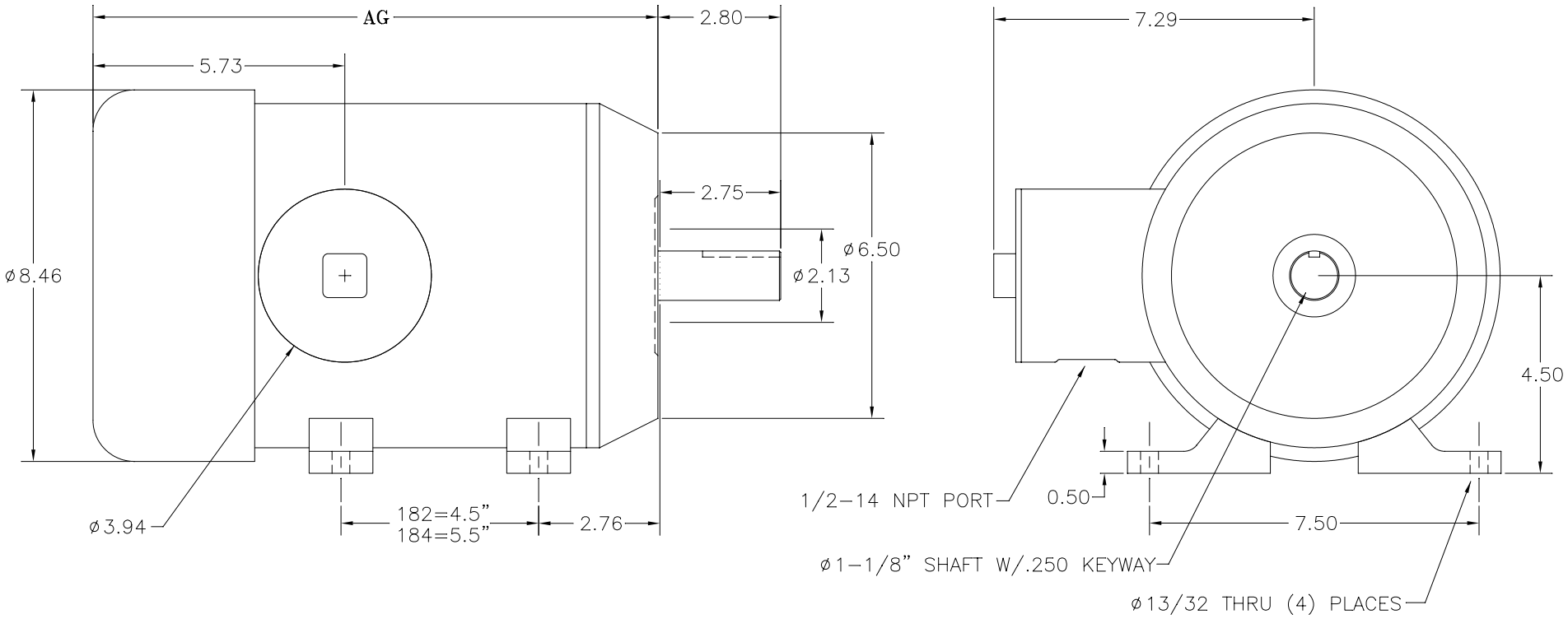

1. ALLOW 1" CLEARANCE BEYOND FAN SHROUD FOR AIR FLOW

NOTES:

DO NOT SCALE DRAWING

UNLESS OTHERWISE SPECIFIED

DIMENSIONS ARE IN INCHES

DIMENSIONS AND SURFACE TEXTURE DESIGNATIONS APPLY PRIOR TO FINISH

DEBURR AND BREAK ALL SHARP EDGES .005-.015

MATERIAL: T304 EXTERIOR 17-4 H1150 SHAFT

FINISH: #2B AS CAST FEET

GENERAL TOLERANCES:
.X = ±.015
.XX = ±.010
.XXX = ±.005
FRACTIONAL = ±1/64
ANGULAR = ±1/2°

REFERENCE DRAWING:

DRWG. NO. DRAFTING\MOTORS\STANDARDIZED DRAWINGS\FOOD\180\180T

STAINLESS MOTORS INC.

DRAWN GP
CHECK
ENG. JO
DATE 4/21/03

180T FRAME
FOOT MOUNT
TEFC, THRU FOOT