AG DIM.	2 POLE	4 POLE	6 POLE	8 POLE
2 HP				16.90
3 HP			16.90	16.90
5 HP			17.65	
7.5 HP	16.90	16.90		
10 HP	17.65	17.65		

REVISIONS			
REV	DESCRIPTION	BY	DATE

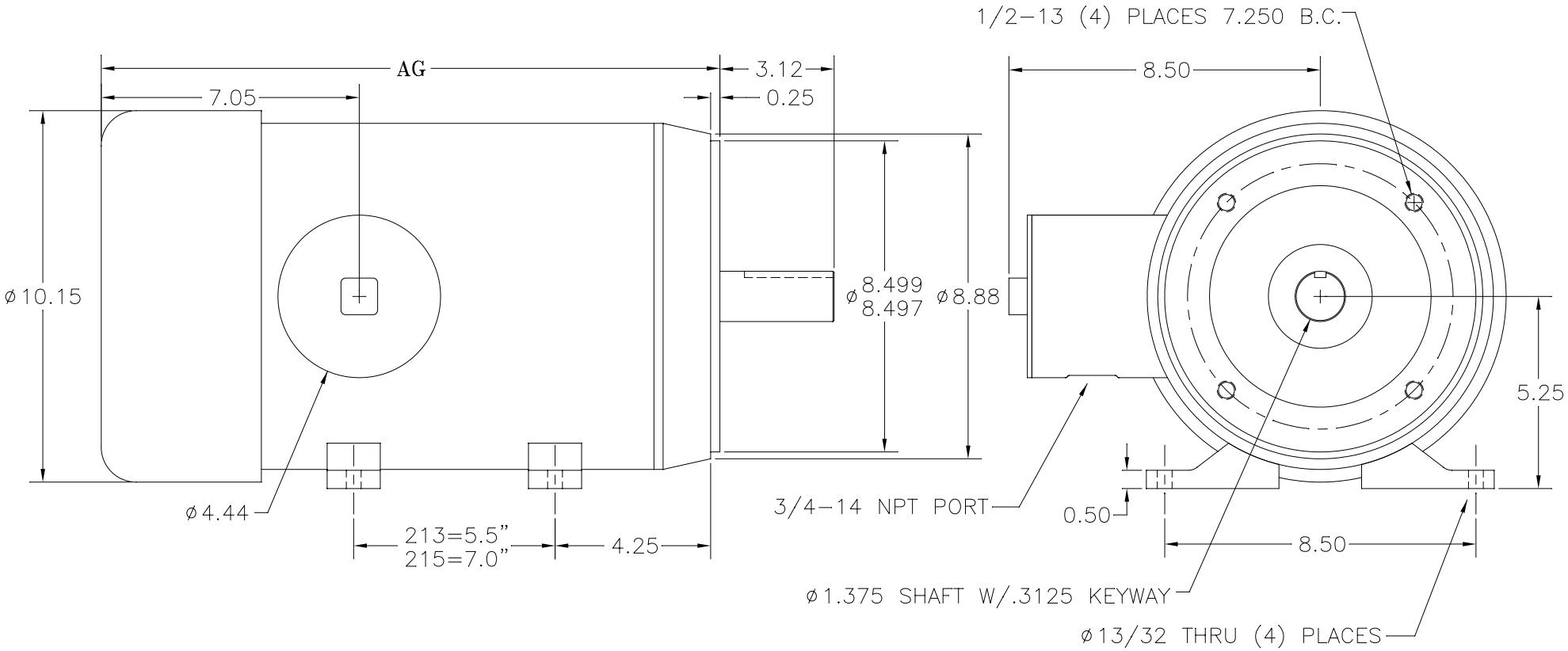

3. ALLOW 1" CLEARANCE BEYOND FAN SHROUD FOR AIR FLOW
2. FOOTLESS DIMS SAME
1. THROUGH HOLE FOOT SHOWN, BLIND TAPPED FOOT AVAILABLE WITH 3/8–16 X .500 DP.

NOTES:

DO NOT SCALE DRAWING

UNLESS OTHERWISE SPECIFIED

DIMENSIONS ARE IN INCHES

DIMENSIONS AND SURFACE TEXTURE DESIGNATIONS APPLY PRIOR TO FINISH

DEBURR AND BREAK ALL SHARP EDGES .005–.015

MATERIAL: T304 EXTERIOR 17–4 H1150 SHAFT

FINISH: #4 LINE POLISHED SHROUD

GENERAL TOLERANCES:
.X = ±.015
.XX = ±.010
.XXX = ±.005
FRACTIONAL = ±1/64
ANGULAR = ±1/2°

REFERENCE DRAWING:

DRWG. NO. MOTORS\STANDARDIZED DRAWINGS\PHARM\210\210TC

STAINLESS MOTORS INC.

DRAWN GP
CHECK
ENG. JO
DATE 5/23/03

210TC FRAME
C FACE MOUNT
TEFC, THRU FOOT