AG DIM.	2 POLE	4 POLE	6 POLE	8 POLE
1/2 HP	10.08	10.08	10.08	11.08
1 HP	10.58	10.58	11.58	
1.5 HP	11.08	11.08		
2 HP	11.58	11.58		
3 HP	11.58			

REVISIONS			
REV	DESCRIPTION	BY	DATE

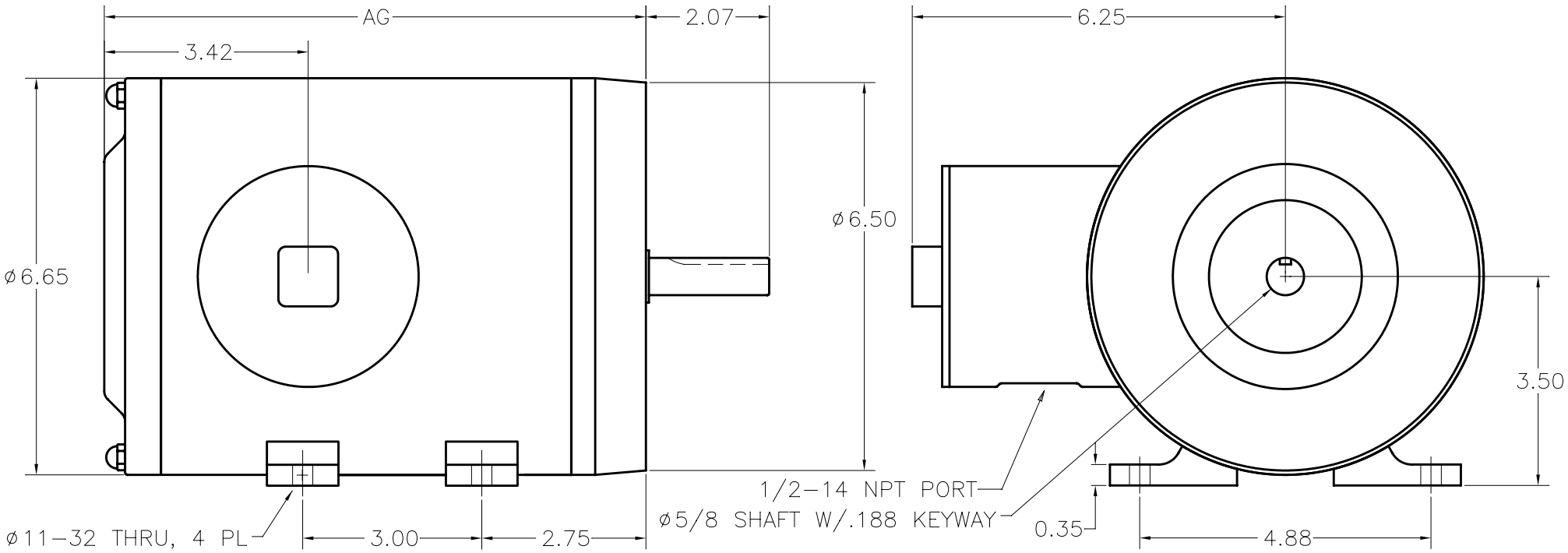

1. THROUGH HOLE FOOT SHOWN, BLIND TAPPED FOOT AVAILABLE WITH 5/16–18 X .450 DP.

NOTES:

DO NOT SCALE DRAWING

UNLESS OTHERWISE SPECIFIED

DIMENSIONS ARE IN INCHES

DIMENSIONS AND SURFACE TEXTURE DESIGNATIONS APPLY PRIOR TO FINISH

DEBURR AND BREAK ALL SHARP EDGES .005–.015

MATERIAL: T304 EXTERIOR 17–4 H1150 SHAFT

FINISH: #4 LINE POLISHED SHROUD

GENERAL TOLERANCES:
.X = ±.015
.XX = ±.010
.XXX = ±.005
FRACTIONAL = ±1/64
ANGULAR = ±1/2°

REFERENCE DRAWING:

DRWG. NO. F:\DRAFTING\MOTORS\STANDARDIZED DRAWINGS\PHARM\56\56–TENV

STAINLESS MOTORS INC.

DRAWN MFG
CHECK
ENG. JO
DATE 07/05/05

56 FRAME FOOT MOUNT TENV, THRU FOOT